35.Oil Pump Housing

A: REMOVAL

1) Remove the transmission assembly from vehicle body. <Ref. to 4AT-37, REMOVAL, Automatic Transmission Assembly.>
2) Pull out the torque converter clutch assembly. <Ref. to 4AT-69, REMOVAL, Torque Converter Clutch Assembly.>
3) Remove the input shaft.

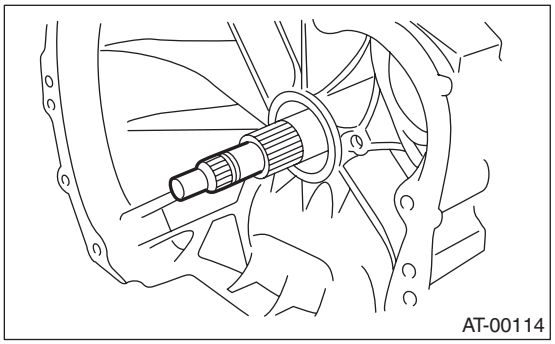

4) Lift up the lever on the rear side of transmission harness connector, and then disconnect it from the stay.
5) Disconnect the inhibitor switch connector from the stay.
6) Remove the oil charge pipe. <Ref. to 4AT-68, REMOVAL, Oil Charge Pipe.>
7) Remove the ATF oil cooler inlet and outlet pipes. <Ref. to 4AT-65, REMOVAL, ATF Cooler Pipe and Hose.>
8) Separate the converter case and transmission case. <Ref. to 4AT-88, REMOVAL, Converter Case.>
9) Separate the transmission case and extension case section. <Ref. to 4AT-70, REMOVAL, Extension Case.>
10) Remove the reduction drive gear. (MP-T model) <Ref. to 4AT-83, REMOVAL, Reduction Drive Gear.>
11) Remove the center differential carrier. (VTD model) <Ref. to 4AT-85, REMOVAL, Center Differential Carrier.>
12) Remove the reduction driven gear. <Ref. to 4AT-81, REMOVAL, Reduction Driven Gear.>
13) Loosen the oil pump housing mounting bolts.

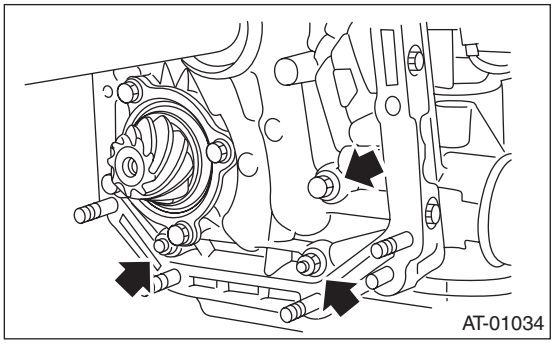

14) Place two wooden blocks on the workbench, and stand the transmission case with the rear end facing down.

NOTE:
- Be careful not to scratch the rear mating surface of the transmission case.
- Be careful of the parking rod and drive pinion protruding from the mating surface.

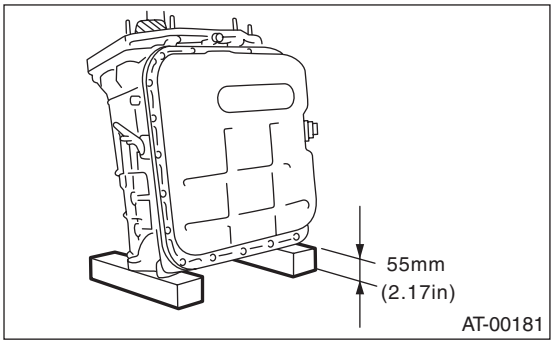

15) Remove the oil pump housing and adjusting thrust washer.

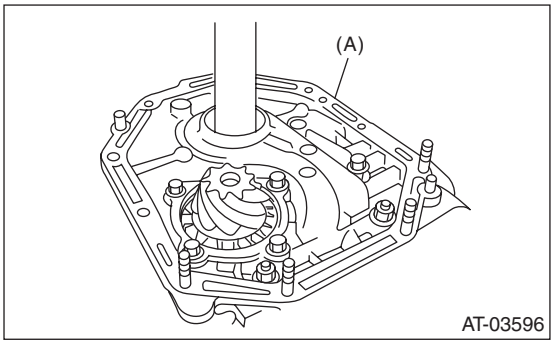

(A) Oil pump housing

B: INSTALLATION

1) Secure the oil pump housing with two nuts and a bolt.

Tightening torque:
42 N·m (4.3 kgf-m, 31 ft-lb)

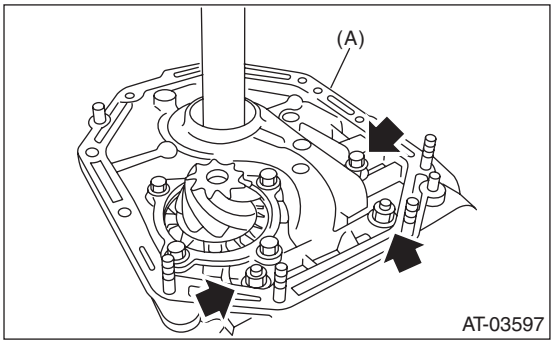

(A) Oil pump housing

2) Install the converter case assembly to the transmission case assembly. <Ref. to 4AT-69, INSTALLATION, Torque Converter Clutch Assembly.>

3) Install the reduction driven gear. <Ref. to 4AT-81, INSTALLATION, Reduction Driven Gear.>
4) Install the reduction drive gear. (MP-T model) <Ref. to 4AT-83, INSTALLATION, Reduction Drive Gear.>
5) Install the center differential carrier. (VTD model) <Ref. to 4AT-85, INSTALLATION, Center Differential Carrier.>
6) Join the transmission case and the extension case, and then install the rear vehicle speed sensor. <Ref. to 4AT-70, INSTALLATION, Extension Case.>
7) Insert the inhibitor switch and transmission connector to the stay.

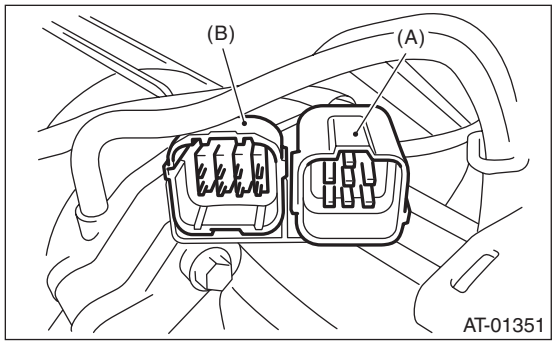

(A) Transmission harness
(B) Inhibitor switch harness

8) Install the ATF cooler pipe. <Ref. to 4AT-66, INSTALLATION, ATF Cooler Pipe and Hose.>
9) Install the oil charge pipe together with an O-ring. <Ref. to 4AT-68, INSTALLATION, Oil Charge Pipe.>
10) Insert the input shaft, and check the amount of protrusion.

NOTE:
Turn the input shaft lightly by hand while inserting.

Normal protrusion amount A:
50 — 55 mm (1.97 — 2.17 in)

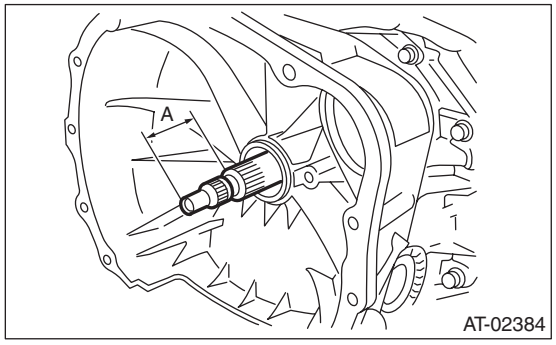

11) Install the torque converter clutch assembly. <Ref. to 4AT-69, INSTALLATION, Torque Converter Clutch Assembly.>
12) Install the transmission assembly to the vehicle. <Ref. to 4AT-39, INSTALLATION, Automatic Transmission Assembly.>

C: DISASSEMBLY

1. OIL PUMP COVER

1) Remove the four seal rings.

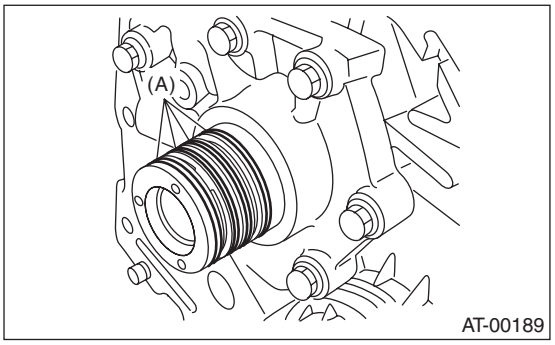

(A) Seal ring

2) Remove the bolt, and lightly tap the stator shaft end to remove the cover.

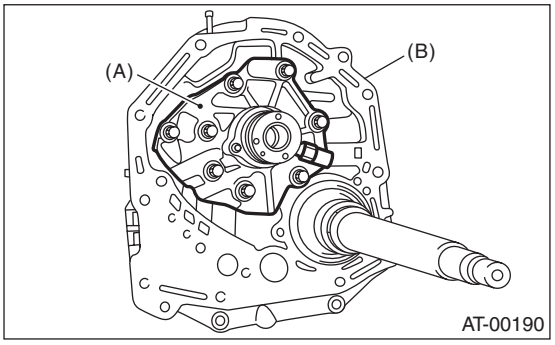

(A) Oil pump cover
(B) Oil pump housing

3) Remove the inner and outer rotors.

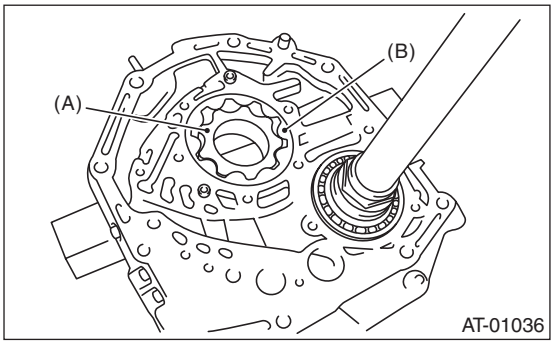

(A) Inner rotor
(B) Outer rotor

2. OIL SEAL RETAINER

1) Remove the oil seal retainer.

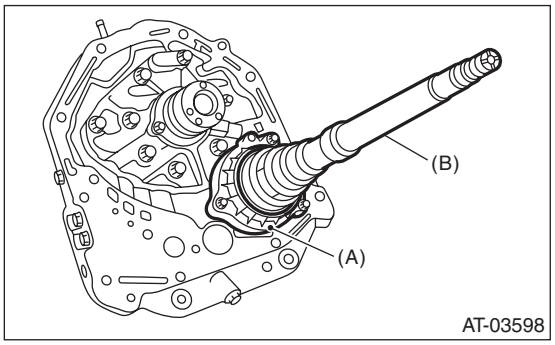

(A) Oil seal retainer
(B) Drive pinion shaft

2) Remove the O-ring.

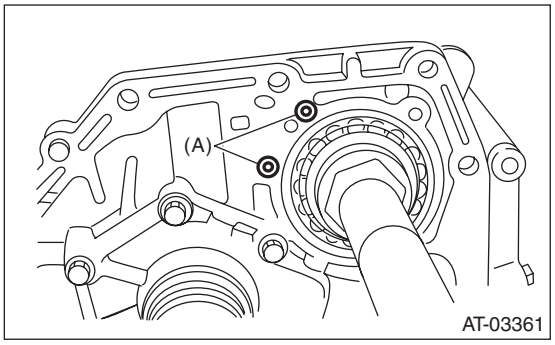

(A) O-ring

3) Remove the oil seal from the oil seal retainer.

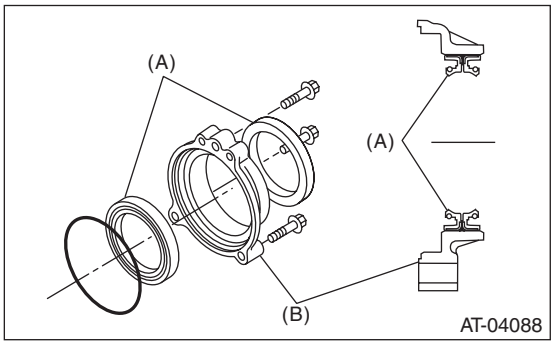

(A) Oil seal
(B) Oil seal retainer

D: ASSEMBLY

1. OIL PUMP COVER

1) Install the oil pump rotor assembly to oil pump housing.

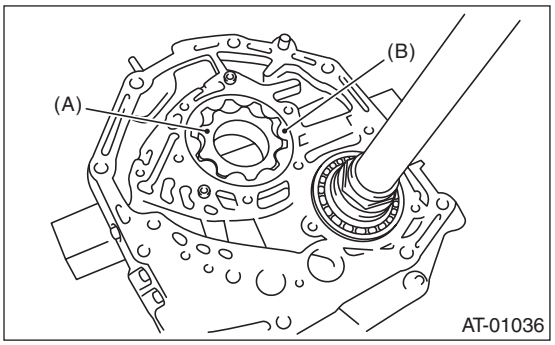

(A) Inner rotor
(B) Outer rotor

2) Align both pivots with the pivot holes of the cover, and then install the oil pump cover while being careful not to apply excessive force to the pivots.

Tightening torque:
25 N·m (2.5 kgf-m, 18.4 ft-lb)

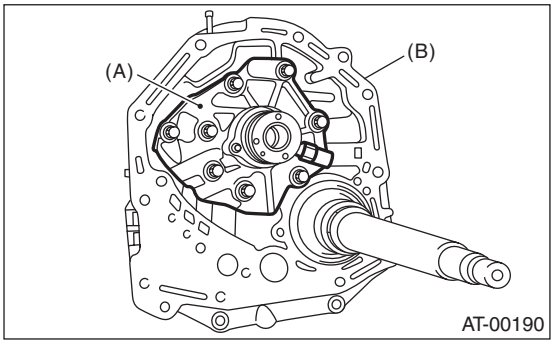

(A) Oil pump cover
(B) Oil pump housing

3) After assembling, turn the oil pump shaft to check for smooth rotation of rotor.
4) Install the oil seal retainer and new seal rings. After installing, adjust the tooth contact with the drive pinion backlash. <Ref. to 4AT-94, ADJUSTMENT, Oil Pump Housing.>

NOTE:
There are two types of seals. They are identified by color. Install at the proper positions by referring to the figure.

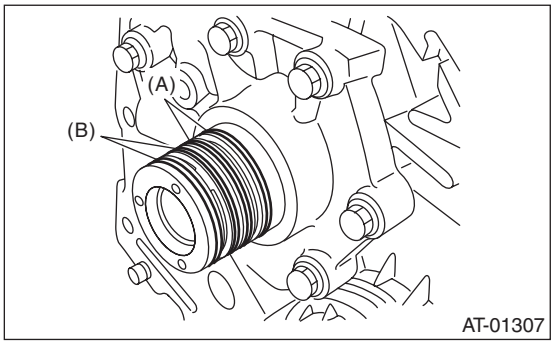

(A) Seal ring (Black)
(B) Seal ring (Brown)

2. OIL SEAL RETAINER

1) Install two new oil seals to the oil seal retainer in the proper direction using the ST.
ST 499247300 INSTALLER

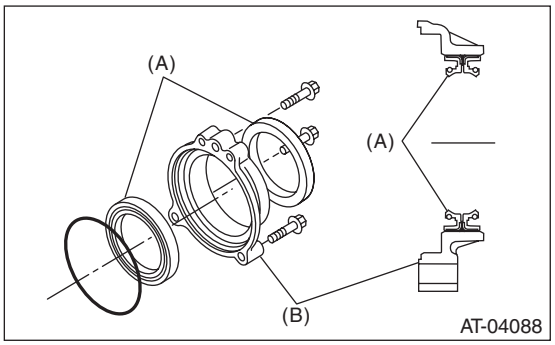

(A) Oil seal
(B) Oil seal retainer

2) Install a new O-ring to the oil pump housing using Vaseline.

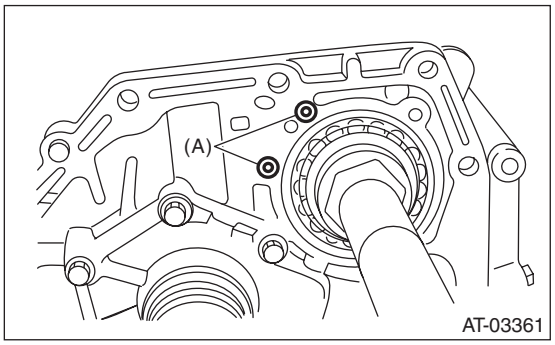

(A) O-ring

3) Install the oil seal being careful not to damage oil seal lip, and secure it using three bolts.

Tightening torque:
7 N·m (0.7 kgf-m, 5.1 ft-lb)

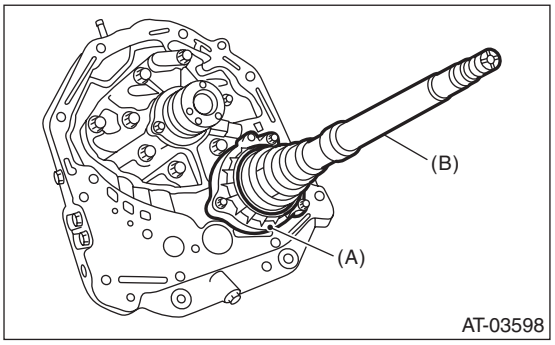

(A) Oil seal retainer
(B) Drive pinion shaft

E: INSPECTION

1) Check the seal ring and oil seal for breaks and damage.
2) Check other parts for dents or faults.
3) Oil pump rotor assembly selection
   (1) Tip clearance
   Install the inner rotor and outer rotor to the oil pump. With rotor gears facing each other, measure the crest-to-crest clearance.

Tip clearance:
0.02 — 0.15 mm (0.0008 — 0.0059 in)

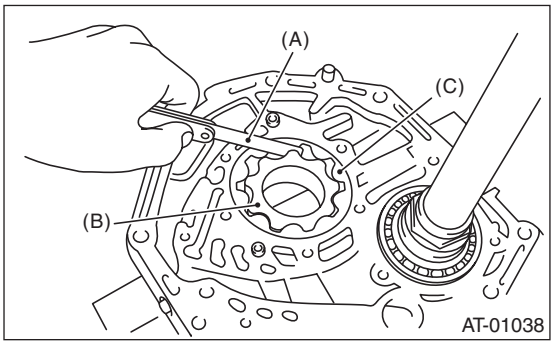

(A) Thickness gauge
(B) Inner rotor
(C) Outer rotor

   (2) Side clearance
   Set a depth gauge to oil pump housing, then measure the oil pump housing-to-rotor clearance.

Side clearance:
0.02 — 0.04 mm (0.0008 — 0.0016 in)

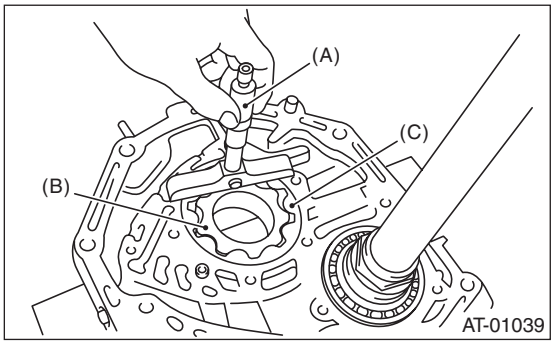

(A) Depth gauge
(B) Inner rotor
(C) Outer rotor

(3) If the depth and side clearance are out of specification, replace the oil pump rotor assembly.

Oil pump rotor assembly	
Part No.	Thickness mm (in)
15008AA060	11.37 — 11.38 (0.4476 — 0.4480)
15008AA070	11.38 — 11.39 (0.4480 — 0.4484)
15008AA080	11.39 — 11.40 (0.4484 — 0.4488)

Measure the total end play and adjust it to be within specifications. <Ref. to 4AT-94, ADJUSTMENT, Oil Pump Housing.>

F: ADJUSTMENT

1) Using the ST, measure the length “L”, from the end of the ST to the recessed portion of the high clutch drum.
ST 398643600 GAUGE

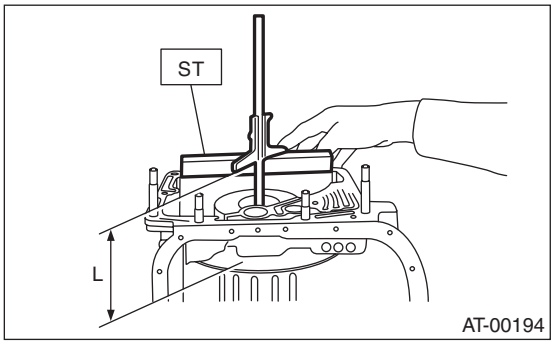

2) Measure the distance from the oil pump housing mating surface to the end surface of the ST using the ST.
ST 398643600 GAUGE

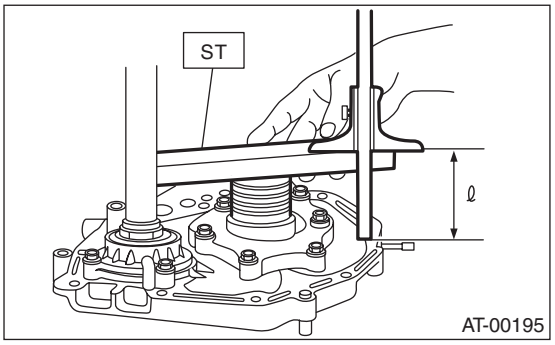

3) Calculation of total end play
Select a suitable bearing race from the table below so that clearance C will be within 0.25 to 0.55 mm (0.0098 to 0.0217 in).
C = (L + G) – ℓ

C	Clearance between concave section of high clutch and end of clutch drum support
L	Length from the case mating surface to the end face of the ST
G	Gasket thickness [0.28 mm (0.0110 in)]
ℓ	Height from the housing mating surface to the end face of the ST

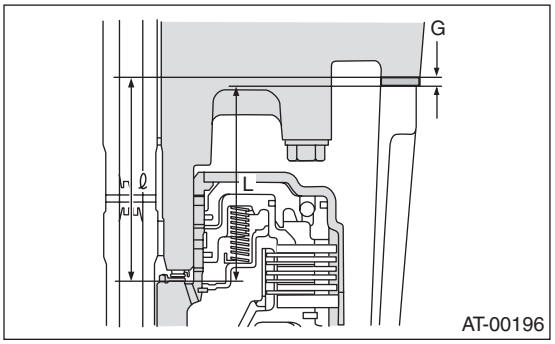

Thrust needle bearing	
Part No.	Thickness mm (in)
806528050	4.1 (0.161)
806528060	4.3 (0.169)
806528070	4.5 (0.177)
806528080	4.7 (0.185)
806528090	4.9 (0.193)
806528100	5.1 (0.201)

4) After completing the end play adjustment, insert the bearing race into the high clutch race. Apply Vaseline to install the thrust needle bearing to the oil pump cover.

5) After correctly installing the new gasket to the case mating surface, carefully install the oil pump housing assembly. Be careful to avoid hitting the drive pinion against the inside of case.
6) Align the dowel pins and install both parts. Make sure there is no clearance at the mating surface.